Dimensions：55.1*27.6*1.2inch
Mono Power：200W

Characteristics

- High efficiency solar cell to keep the modules efficiency reach to 20.41%.
- Positive tolerance to ensure higher output.
- Excellent performance under weak light conditions.
- Modules withstand extremely (temperature, load and impact) TUV certification.
- All modules combination and packing through stepping current to keep effectively reduce mismatch loss.
- 100% EL test to keep higher quality.

Anodized aluminum frame withstand corrosion and damage, Special osculum can reduce destruction by water freeze.

IP65 junction box long-term weather endurance.

Warranty

- 5 years workmanship warranty.

Quality and safety

- ISO9001:2015、ISO14001:2015、ISO45001:2018 certified supplier, we provide world first class solar products for clients.
- TUV,IEC,CEC,CE,CB approved.

Electrical Characteristics

Model No.	SG200WM
Maximum Power (Pmax)	200W
Max-power Voltage (Vmp)	36.16V
Max-power Current (Imp)	5.53A
Open-circuit Voltage (Voc)	43.39V
Short-circuit Current (Isc)	5.86A
Module Efficiency	20.41%
Operating Temperature	-40℃~+85℃
Maximum System Voltage	1000Vdc
Maximum Series Fuse Rating	10A
Power Tolerance	±3%

*STC condition：1000 W/m²,1.5AM and 25℃ cell temperature.

I-V Curve

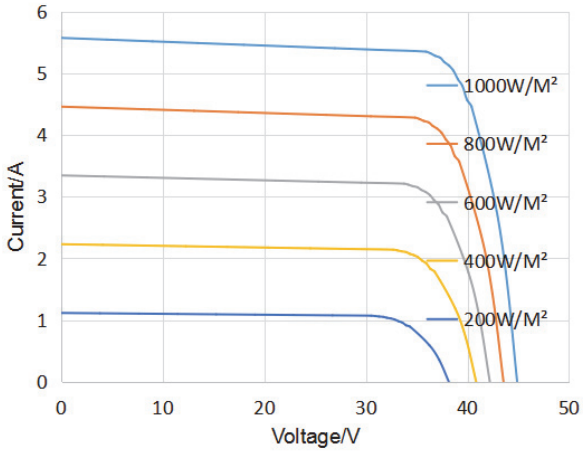

Temperature Characteristics

NMOT	46℃±2℃
Temperature Co-efficient of Pmax	-0.36%/℃
Temperature Co-efficient of Voc	-0.28%/℃
Temperature Co-efficient of Isc	0.048%/℃

Dimensions

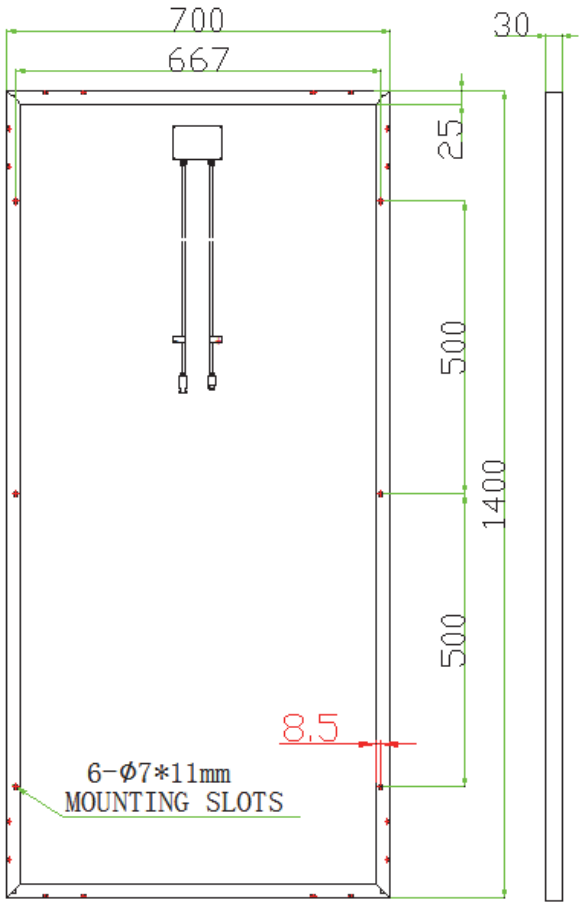

Mechanical Characteristics

Mono Power	200W
Cell Type	Mono 166mm
Cell Arrangement	64(4*16)
Dimensions	55.1*27.6*1.2inch (1400*700*30mm)
Weight	23.32lbs (10.6kg)
Front Cover	3.2mm tempered glass
Frame Material	Anodized aluminium alloy
Junction Box	IP65 rated
Output Cables	4mm²,Length:(+)1200mm/(-)1200mm+MC4

Packing

Packing	20'GP	40'HC
Pieces/Pallet	2	2
Pieces/container	550	1230