RICH SOLAR | MEGA™ Series Solar Panels

MEGA 100 / MEGA 100 ONYX
100W 12V SOLAR PANEL

22.6%
Maximum Cell Efficiency

100W
Maximum Power Output

0~±5W
Positive Power Tolerance

MEGA 100 (MODEL: RS-M100)

MEGA 100 ONYX (MODEL: RS-M100B)

Maximum Efficiency

Multi-busbar cell technology improves light trapping, reduces series resistance, and enhances current collection.

High-transmission, AR-coated tempered glass maximizes sunlight capture while ensuring long-term durability.

Superior low-light performance and a low temperature coefficient maintain strong output in varied weather conditions.

Easy Installation

Plug-and-play solar connectors support both series and parallel configurations.

Lightweight, corrosion-resistant anodized aluminum frame allows for easy handling and extended lifespan.

Pre-drilled holes support flexible mounting options such as ground mounts, Z-brackets, poles, and tilt systems.

Ideal for high-end off-grid systems and mobile setups including RVs, cabins, and boats.

Designed for compatibility with existing mainstream optimizers, inverters, and mounting systems.

Proven Reliability

Delivers consistent energy production even on cloudy days or during mornings and evenings.

Innovative non-destructive cutting technology minimizes micro-cracks for enhanced durability.

PID resistance is ensured through advanced cell processing and premium module material control.

Built to withstand harsh environments including salt, ammonia, sand, high temperatures, and high humidity.

Mechanical strength certified up to 5400 Pa positive load and 2400 Pa negative load.

Exceptional Value

Delivers higher performance, greater savings, and long-term satisfaction.

Protected by a 25-year limited product warranty.

Backed by a 25-year performance warranty guaranteeing minimal power degradation over time.

© 2026 RICH SOLAR ALL RIGHTS RESERVED

DIMENSIONS

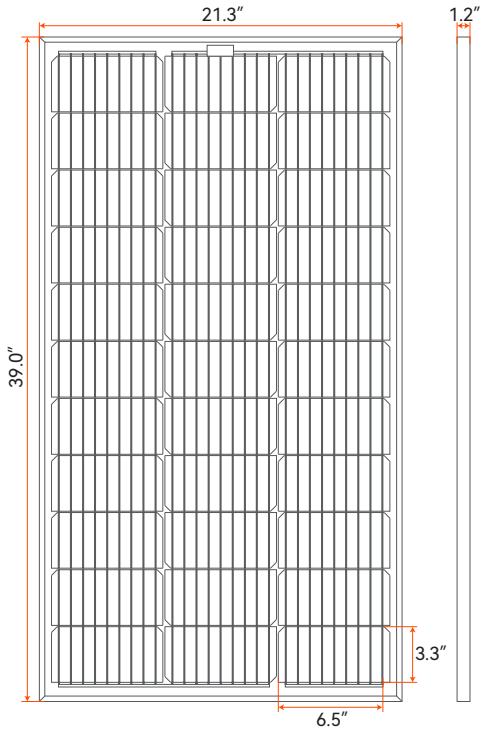

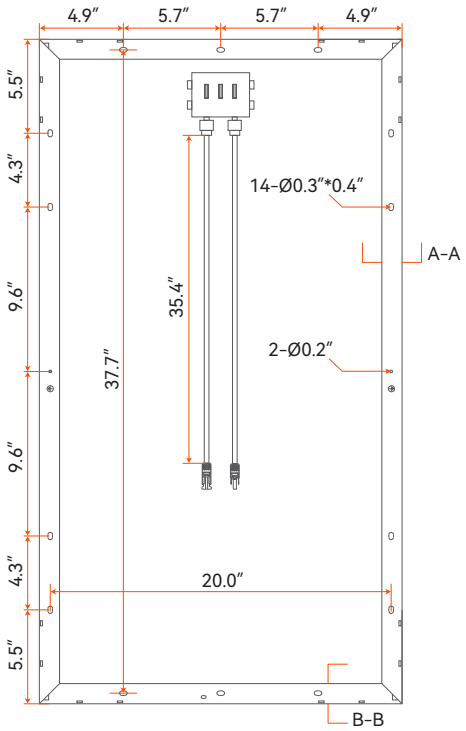

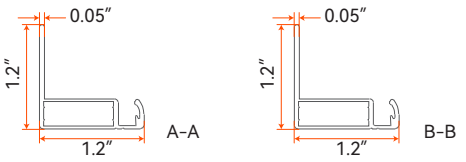

* Actual dimensions may vary by ±0.1 in.

ELECTRICAL DATA (STC)

Peak Power Watts-PMAX (Wp)	100 W
Power Output Tolerance	±5%
Maximum Power Voltage-VMPP (V)	18.6 V
Maximum Power Current-IMPP (A)	5.38 A
Open Circuit Voltage-VOC (V)	22.8 V
Short Circuit Current-ISC (A)	5.78 A
Maximum System Voltage	1000 VDC
Temperature Range	-40~+185°F
Maximum Series Fuse Rating	10 A
Module Efficiency η m (%)	18.1 %

STC: Irradiance 1000 W/m², Cell Temperature 25 °C, Air Mass AM = 1.5

MECHANICAL DATA

Solar Cells Type	Monocrystalline 6.5 × 3.3 in (166 × 83 mm)
Module Dimensions	39.0 × 21.3 × 1.2 in (990 × 540 × 30 mm)
Cell Orientation	33 cells (3 × 11)
Weight	13.2 lb (6 kg)
Glass	3.2 mm (0.13 in), High Transmission, AR Coated Tempered Glass
Backsheet	White / Black
Connector	Solar Connectors
Frame	Anodized Aluminum Alloy
Junction Box	IP 67 rated
Cables	Photovoltaic Technology Cable 4.0 mm² (#12 gauge), 35.4 in (900 mm) Length

TEMPERATURE RATINGS

Nominal Module Operating Temperature (NMOT)	45°C ± 2°C
Temperature Coefficient of PMAX	-0.35%/°C
Temperature Coefficient of VOC	-0.28%/°C
Temperature Coefficient of ISC	0.045%/°C
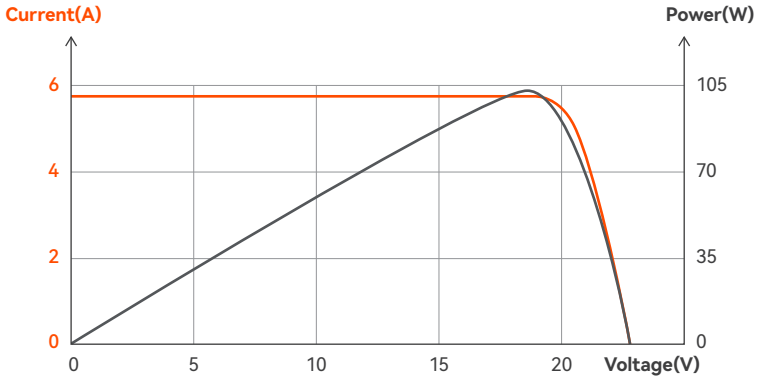
CURVES OF PV MODULE