RICH SOLAR | MEGA™ Series Solar Panels

MEGA 550 BIFACIAL
550W 24V SOLAR PANEL

25.1%
Maximum Cell Efficiency

550W
Maximum Power Output

0~+5W
Positive Power Tolerance

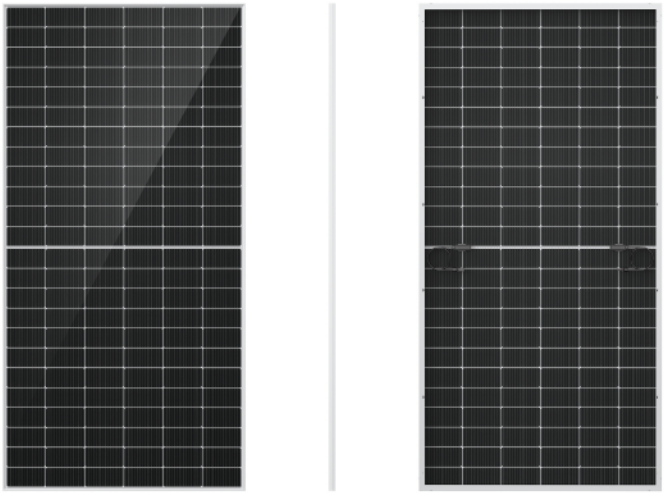

MEGA 550 BIFACIAL (MODEL: RS-M550BF)

Maximum Efficiency

N-Type TOPCon multi-busbar cell technology improves light trapping, reduces series resistance, and enhances current collection.

High-transmission, AR-coated tempered glass maximizes sunlight capture while ensuring long-term durability.

Superior low-light performance and a low temperature coefficient maintain strong output in varied weather conditions.

High Energy Yield

Excellent IAM (Incident Angle Modifier) and low irradiation performance validated by third-party certifications.

Unique design optimizes energy production under inter-row shading conditions.

Generates up to 25% additional power gain from the back side depending on albedo.

Exceptional Value

Delivers higher performance, greater savings, and long-term satisfaction.

Protected by a 25-year limited product warranty.

Backed by a 25-year performance warranty guaranteeing minimal power degradation over time.

Proven Reliability

Delivers consistent energy production even on cloudy days or during mornings and evenings.

Innovative non-destructive cutting technology minimizes micro-cracks for greater durability.

PID resistance is ensured through advanced cell processing and premium module material control.

Built to withstand harsh environments including salt, ammonia, sand, high temperatures, and high humidity.

Mechanical strength certified up to 5400 Pa positive load and 2400 Pa negative load.

Easy Installation

Plug-and-play solar connectors support both series and parallel configurations.

Lightweight, corrosion-resistant anodized aluminum frame allows for easy handling and extended lifespan.

Pre-drilled holes support flexible mounting options such as ground mounts, Z-brackets, poles, and tilt systems.

Ideal for high-end off-grid systems and mobile setups including RVs, cabins, and boats.

Designed for compatibility with existing mainstream optimizers, inverters, and mounting systems.

© 2026 RICH SOLAR ALL RIGHTS RESERVED

DIMENSIONS

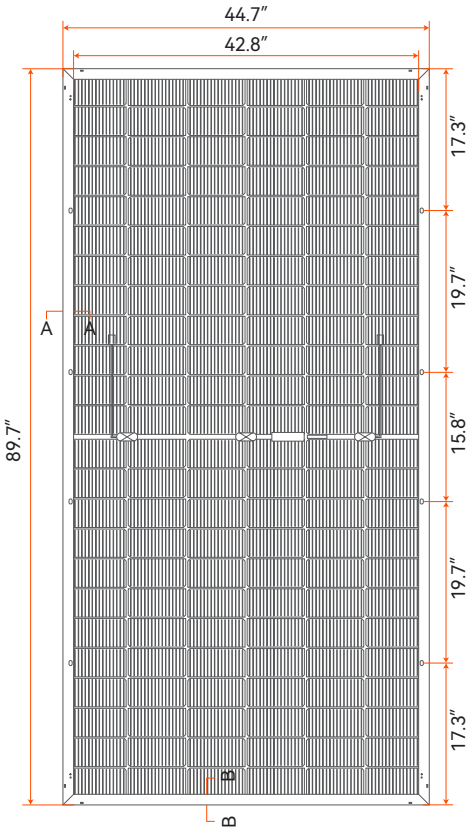

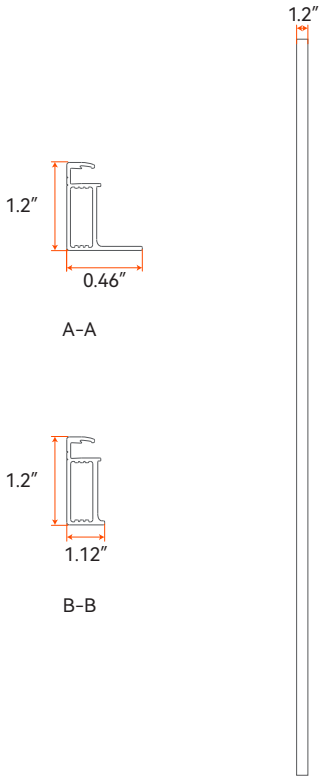

* Actual dimensions may vary by ±0.1 in.

ELECTRICAL DATA (STC)

Peak Power Watts-PMAX (Wp)	550 W
Power Output Tolerance-PMAX (W)	0~+5 W
Maximum Power Voltage-VMPP (V)	42.0 V
Maximum Power Current-IMPP (A)	13.1 A
Open Circuit Voltage-VOC (V)	49.8 V
Short Circuit Current-ISC (A)	14.0 A
Maximum System Voltage	1500 VDC
Temperature Range	-40~+185°F
Maximum Series Fuse Rating	30 A
Module Efficiency η m (%)	23.0 %

STC: Irradiance 1000 W/m², Cell Temperature 25 °C, Air Mass AM = 1.5

MECHANICAL DATA

Solar Cells Type	N-Type TOPCon 7.2 × 3.6 in (182 × 91 mm)
Module Dimensions	89.7 × 44.7 × 1.4 in (2278 × 1134 × 35 mm)
Cell Orientation	144 cells (6 × 12 × 2)
Weight	73.2 lb (33.2 kg)
Front Glass	2.0 mm, highly transparent tempered glass with anti-reflective coating
Connector	Solar Connectors
Frame	Anodized Aluminum Alloy / Polyurethane Composite Frame
Junction Box	IP 68 rated
Cables	4 mm², 47.2 in (1200 mm)
Diode Quantity	3 pcs
Load Resistance	5400 Pa (front) / 2400 Pa (rear)

TEMPERATURE RATINGS

Nominal Module Operating Temperature (NMOT)	44°C ± 2°C
Temperature Coefficient of PMAX	-0.30%/°C
Temperature Coefficient of VOC	-0.25%/°C
Temperature Coefficient of ISC	0.043%/°C
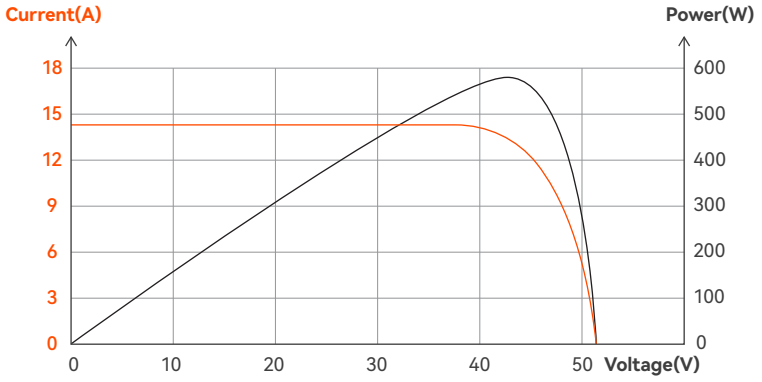
CURVES OF PV MODULE