All-in-one solar charge inverter

User Manual

Product model:

SPH302480A

Important safety instructions

Please keep this manual for future use.

This manual contains all safety, installation and operating instructions for the SPH302480A all-in-one solar charge inverter.

Please read all instructions and precautions in the manual carefully before installation and use.

- Non-safety voltage exists inside the all-in-one solar charge inverter. To avoid personal injury, users shall not disassemble the all-in-one solar charge inverter themselves. Contact our professional maintenance personnel if their is a need for repair.
- Do not place the all-in-one solar charge inverter within the reach of children.
- Do not install the all-in-one solar charge inverter in harsh environments such as moist, oily, flammable or explosive, or heavily dusty areas.
- The mains input and AC output are high voltage, so please do not touch the wiring terminals.
- The housing of the all-in-one solar charge inverter is hot when it is working. Do not touch it.
- Do not open the terminal protective cover when the all-in-one solar charge inverter is working.
- It is recommended to attach proper fuse or circuit breaker to the outside of the all-in-one solar charge inverter.
- Always disconnect the fuse or circuit breaker near the terminals of PV array, mains and battery before installing and adjusting the wiring of the all-in-one solar charge inverter.
- After installation, check that all wire connections are tight to avoid heat accumulation due to poor connection, which is dangerous.
- The all-in-one solar charge inverter is off-grid. It is necessary to confirm that it is the only input device for load, and it is forbidden to use it in parallel with other input AC power to avoid damage.

CONTENTS

1. General information 1

1.1 Product overview and features 1
1.2 Basic system introduction 2
1.3 Appearance 3
1.4 Dimension drawing 4

2. Installation instructions 5

2.1 Installation precautions 5
2.2 Wiring specifications and circuit breaker selection 6
2.3 Installation and wiring 7

3. Operating modes 12

3.1 Charging mode 12
3.2 Output mode 12

4. LCD screen operating instructions 15

4.1 Operation and display panel 15
4.2 Setup parameters description 19
4.3 Battery type parameters 25

5. Other functions 27

5.1 Dry node 27
5.2 RS485 communication port 27
5.3 Can communication function 27
5.4 USB communication port 27

6. Protection 28

6.1 Protections provided 28
6.2 Fault code meaning 29
6.3 Handling measures for part of faults 31

7. System maintenance 32

8. Technical parameters 33

1. General information

1.1 Product overview and features

SPH302480A is a new all-in-one hybrid solar charge inverter, which integrates solar energy storage & means charging energy storage and AC sine wave output. Thanks to DSP control and advanced control algorithm, it has high response speed, high reliability and high industrial standard. Four charging modes are optional, i.e. Only Solar, Mains Priority, Solar Priority and Mains & Solar hybrid charging; and two output modes are available, i.e. Inverter and Mains, to meet different application requirements. The solar charging module applies the latest optimized MPPT technology to quickly track the maximum power point of the PV array in any environment and obtain the maximum energy of the solar panel in real time.

Through a state of the art control algorithm, the AC-DC charging module realizes fully digital voltage and current double closed loop control, with high control precision in a small volume. Wide AC voltage input range and complete input/output protections are designed for stable and reliable battery charging and protection.

Based on full-digital intelligent design, the DC-AC inverter module employs advanced SPWM technology and outputs pure sine wave to convert DC into AC. It is ideal for AC loads such as household appliances, power tools, industrial equipment, and electronic audio and video equipment. The product comes with a segment LCD display design which allows real-time display of the operating data and status of the system. Comprehensive electronic protections keep the entire system safer and more stable.

Features:

1. Full digital voltage and current double closed loop control, advanced SPWM technology, output of pure sine wave.
2. Two output modes: mains bypass and inverter output; uninterrupted power supply.
3. Available in 4 charging modes: Only Solar, Mains Priority, Solar Priority and Mains & Solar hybrid charging.
4. Advanced MPPT technology with an efficiency of 99.9%.
5. Designed with a LCD screen and 3 LED indicators for dynamic display of system data and operating status.
6. ON/OFF rocker switch for AC output control.
7. Power saving mode available to reduce no-load loss.
8. Intelligent variable speed fan to efficiently dissipate heat and extend system life.
9. Lithium battery activation by PV solar or mains, allowing access of lead-acid battery and lithium battery.
10. 360 ° all-round protection with a number of protection functions.
11. Complete protections, including short circuit protection, over voltage and under voltage protection, overload protection, reverse protection, etc.

1.2 Basic system introduction

The figure below shows the system application scenario of this product. A complete system consists of the following parts:

1. PV module: Convert light energy into DC power, and charge the battery through the all-in-one solar charge inverter, or directly invert into AC power to drive the load.

2. Mains or generator: Connected at the AC input, to power the load while charging the battery. If the mains or generator is not connected, the system can also operate normally, and the load is powered by the battery and PV module.

3. Battery: Provided to ensure normal power supply to the system loads when solar energy is insufficient and the Mains is not connected.

4. Household load: Allow connection of various household and office loads, including refrigerators, lamps, TVs, fans and air conditioners.

5. All-in-one solar charge inverter: The energy conversion unit of the whole system.

Specific system wiring method depends on the actual application scenario.

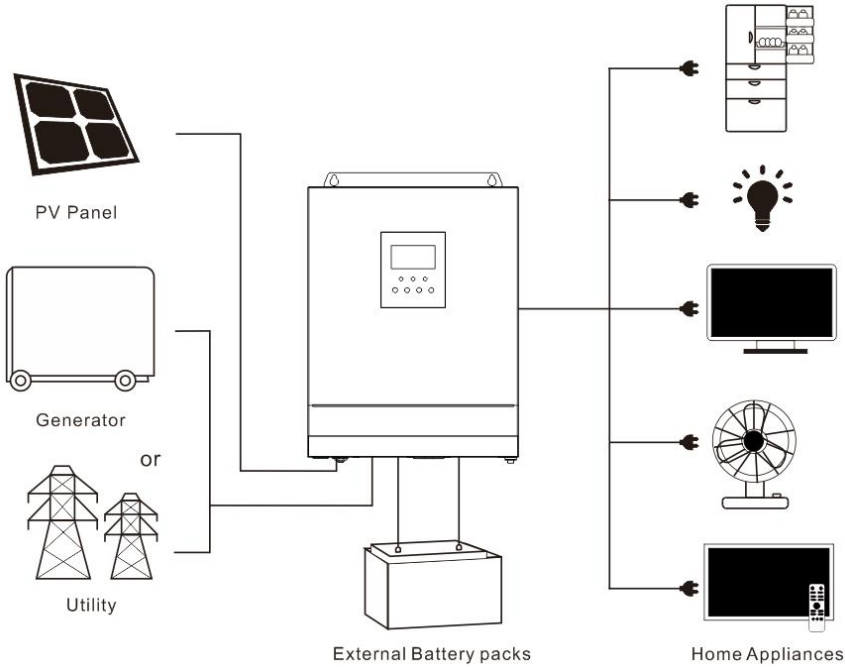

1.3 Appearance

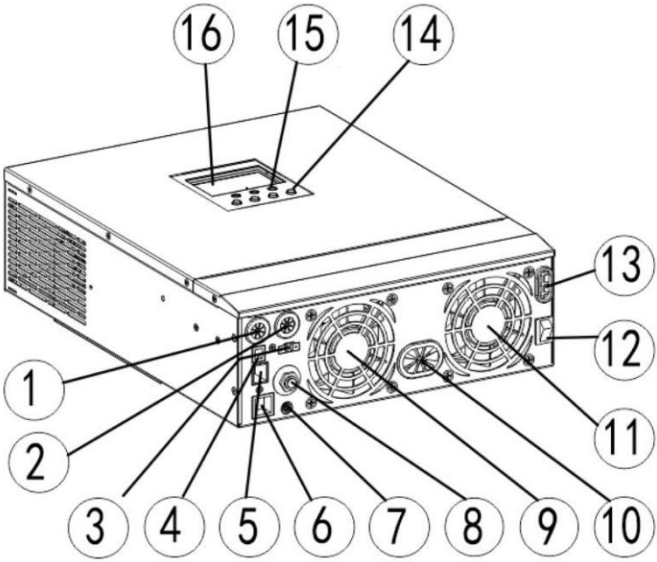

①	AC input port	⑨	Battery port
②	AC output port	⑩	ON/OFF rocker switch
③	USB communication port	⑪	PV port
④	RS485 communication port	⑫	CAN communication port
⑤	Dry contact port	⑬	Touch the key lightly
⑥	Grounding screw hole	⑭	LED Indicator
⑦	Overload protector	⑮	LCD screen
⑧	Cooling fan	⑯	Dust screen

1.4 Dimension drawing

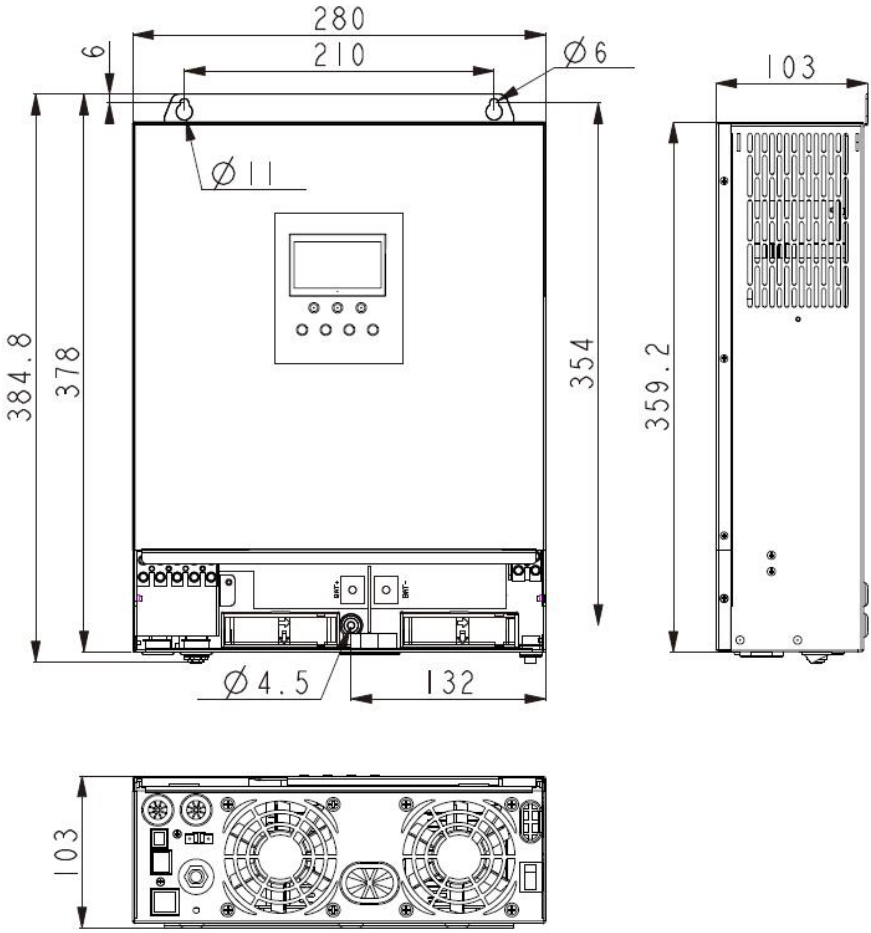

2. Installation instructions

2.1 Installation precautions

Please read this manual carefully prior to installation to familiarize yourself with the installation steps.

- Be very careful when installing the battery. Wear safety goggles when installing a lead-acid liquid battery. Once coming into contact with the battery acid, rinse with clean water timely.
- Do not place metal objects near the battery to prevent short-circuit of the battery.
- Acid gas may be generated when the battery is charged. So, please ensure good ventilation.
- When installing the cabinet, be sure to leave enough space around the all-in-one solar charge inverter for heat dissipation. Do not install the all-in-one solar charge inverter and lead-acid battery in the same cabinet to avoid corrosion by acid gas generated during battery operation.
- Only the battery that meets the requirements of the all-in-one unit can be charged.
- Poorly connected connections and corroded wires may cause great heat which will melt the wire insulation, burn the surrounding materials, and even cause fires. So, make sure the connectors have been tightened, and the wires are secured with ties to avoid looseness of connections caused by shaking of wires during mobile application.
- The system connection wires are selected according to a current density of not more than 5 A/mm^2.
- Avoid direct sunlight and rainwater infiltration for outdoor installation.
- Even after the power is turned off, there is still high voltage inside the unit. Do not open or touch the internal components, and avoid related operations until the capacitor completely discharges.
- Do not install the all-in-one solar charge inverter in harsh environments such as moist, oily, flammable or explosive, or heavily dusty areas.
- Polarity at the battery input end of this product shall not be reversed, otherwise it may damage the device or cause unpredictable danger.
- The mains input and AC output are high voltage, so please do not touch the wiring terminals.
- When the fan is working, do not touch it to prevent injury.
- Load equipment input power needs to confirm that this all-in-one solar charge inverter is the only input device, and it is forbidden to use in parallel with other input AC power to avoid damage. It is necessary to confirm that the solar charge inverter is the only input device for load equipment, and it is forbidden to use it in parallel with other input AC power to avoid damage.

2.2 Wiring specifications and circuit breaker selection

Wiring and installation must comply with national and local electrical codes.

Recommended PV array wiring specifications and circuit breaker selection: Since the output current of the PV array is affected by the type, connection method and illumination angle of the PV module, the minimum wire diameter of the PV array is calculated according to its short-circuit current; refer to the short-circuit current value in the PV module specification (the short-circuit current is constant when the PV modules are connected in series; the short-circuit current is the sum of the short-circuit currents of all PV modules connected in parallel); the short-circuit current of the PV array shall not exceed the maximum input current.

- **Refer to the table below for PV input wire diameter and switch:**

Model	Recommended PV wiring diameter	Max. PV input current	Recommended air switch or circuit breaker type
SPH302480A	3.5mm^2/12AWG	13A	2P—25A

Note: The voltage in series shall not exceed the Max. PV input open circuit voltage.

- **Refer to the table below for recommended AC input wire diameter and switch:**

Model	Recommended AC input wiring diameter	Max. bypass input current	Recommended air switch or circuit breaker type
SPH302480A	6mm^2/10AWG	40A	2P—40A

- **Recommended battery input wire diameter and switch selection**

Model	Recommended battery wiring diameter	Rated battery discharge current	Max. charge current	Recommended air switch or circuit breaker type
SPH302480A	30mm^2/2AWG	135A	80A	2P—160A

- **Recommended AC output wiring specifications and circuit breaker selection**

Model	Recommended AC output wiring diameter	Rated inverter AC output current	Max. bypass output current	Recommended air switch or circuit breaker type
SPH302480A	6mm^2/10AWG	25A	40A	2P—40A

Note: The wiring diameter is for reference only. If the distance between the PV array and the all-in-one solar charge inverter or the distance between the all-in-one solar charge inverter and the battery is relatively long, using a thicker wire can reduce the voltage drop to improve system performance.

Note: The above are only recommended wiring diameter and circuit breaker. Please select the appropriate wiring diameter and circuit breaker according to actual situations.

2.3 Installation and wiring

Installation steps: :

Step 1: Determine the installation position and the space for heat dissipation. Determine the installation position of the all-in-one solar charge inverter, such as wall surface; when installing the all-in-one solar charge inverter, ensure that there is enough air flowing through the heat sink, and space of at least 200m to the left and right air outlets of the inverter shall be left to ensure natural convection heat dissipation. Refer to the installation diagram of the whole machine as above.

Warning: Danger of explosion! Never install the all-in-one solar charge inverter and lead-acid battery in the same confined space! Also do not install in a confined place where battery gas may collect.

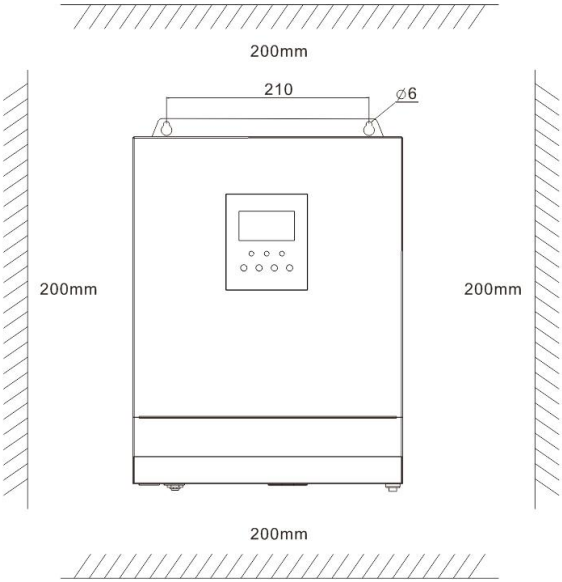

Step 2: Remove the terminal cover

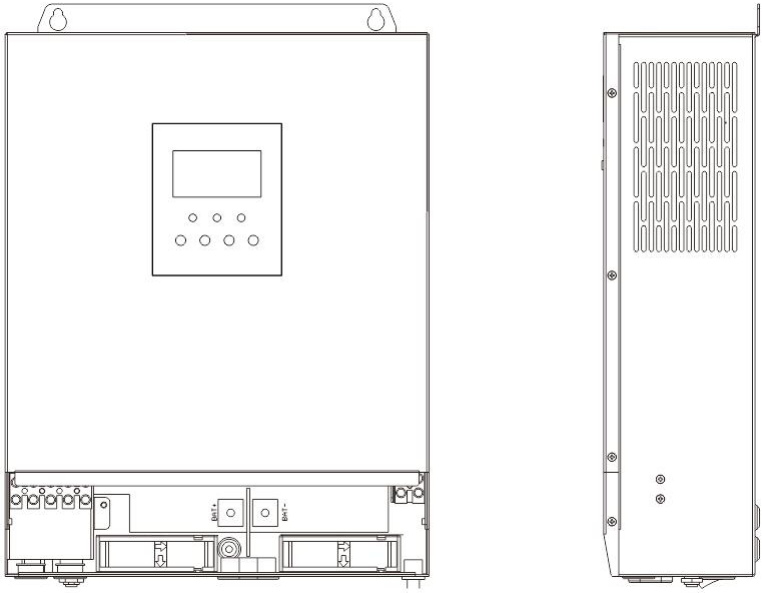

Step3: Wiring

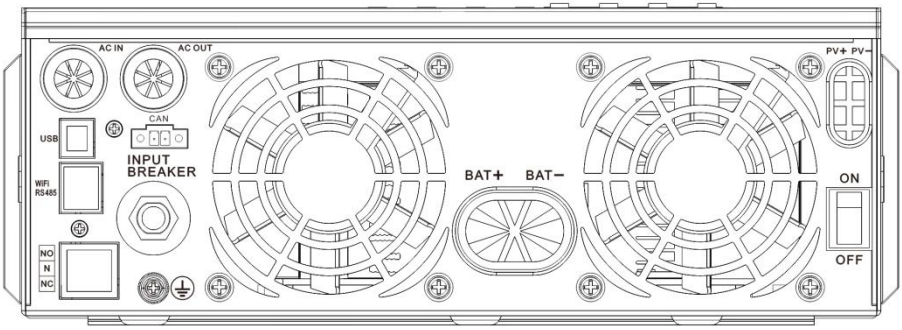

AC input / output wiring method:

(1) Prior to AC input/output wiring, disconnect the external circuit breaker and confirm that the wire used is thick enough. Please refer to Section 2.2 "Wiring Specifications and Circuit Breaker Selection";

(2) Properly connect the AC input wire according to the wire sequence and terminal position shown in the figure below. Please connect the ground wire first, and then the live wire and the neutral wire;

⏚ **: Ground L : Live N : Neutral**

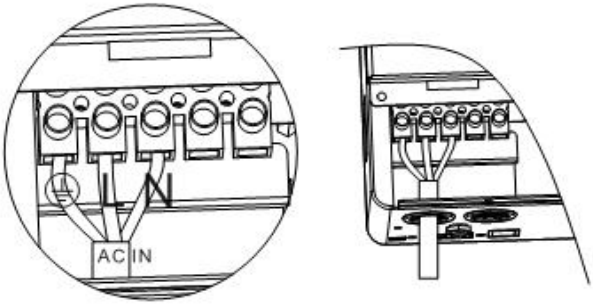

(3) Properly connect the AC output wire according to the wire sequence and terminal position shown in the figure below. Please connect the ground wire first, and then the live live wire and the neutral wire. The ground wire is connected to the grounding screw hole on the cabinet through the O-type terminal.

⏚ **: Ground L : Live N : Neutral**

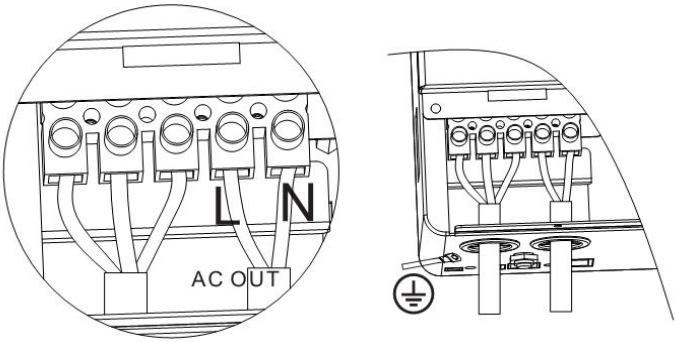

Note: The grounding wire shall be as thick as possible (cross-sectional area is not less than 4mm^2). The grounding point shall be as close as possible to the all-in-one solar charge inverter. The shorter the grounding wire, the better.

PV input wiring method:

(1) Prior to wiring, disconnect the external circuit breaker and confirm that the wire used is thick enough. Please refer to Section 2.2 "Wiring Specifications and Circuit Breaker Selection" ;

(2) Properly connect the PV input wire according to the wire sequence and terminal position shown in the figure below.

PV+: PV input positive pole **PV-: PV input negative pole**

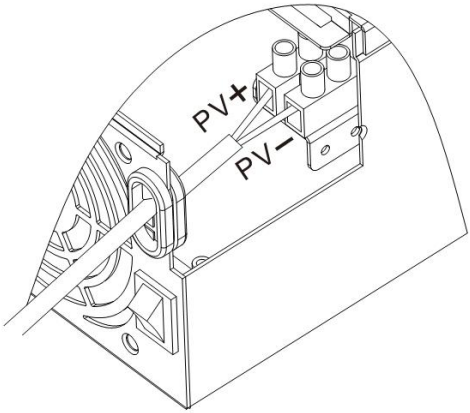

BAT wiring method:

(1) Prior to wiring, disconnect the external circuit breaker and confirm that the wire used is thick enough. Please refer to Section 2.2 "Wiring Specifications and Circuit Breaker Selection". The BAT wire needs to be connected to the machine through the O-type terminal. The O-type terminal with an inner diameter of 5 mm is recommended. The O-type terminal shall firmly press the BAT wire to prevent excessive heat generation caused by excessive contact resistance;

(2) Properly connect the BAT wire according to the wire sequence and terminal position shown in the figure below.

BAT+: Battery positive electrode **BAT-: Battery negative electrode**

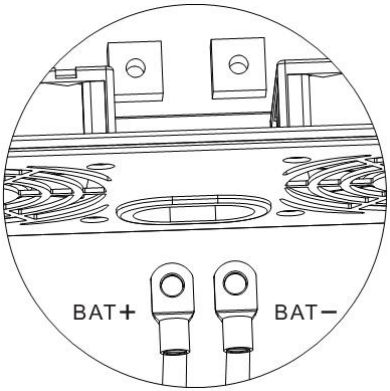

Warnings:

(1) Mains input, AC output and PV array will generate high voltage. So, before wiring, be sure to disconnect the circuit breaker or fuse;

(2) Be very careful during wiring; do not close the circuit breaker or fuse during wiring, and ensure that the "+" and "-" pole leads of each component are connected properly; a circuit breaker must be installed at the battery terminal. Refer to Section 2.2 "Wiring Specifications and Circuit Breaker Selection" to select a right circuit breaker. Before wiring, be sure to disconnect the circuit breaker to prevent strong electric sparks and avoid battery short circuit; if the all-in-one solar charge inverter is used in an area with frequent lightning, it is recommended to install an external lightening arrester at the PV input terminal.

Step 4: Check if the wiring is correct and firm. In particular, check if the battery polarity is reversed, if the PV input polarity is reversed and if the AC input is properly connected.

Step 5: Install the terminals cover.

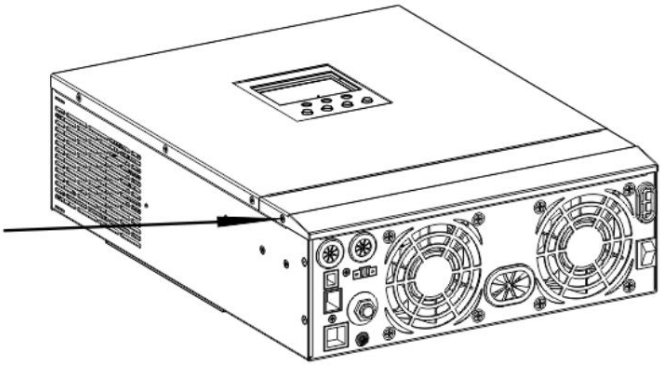

Step 6: Turn on the all-in-one solar charge inverter

First, close the circuit breaker at the battery terminal, and then turn the rocker switch on the left side of the machine to the "ON" state. The "AC/INV" indicator flashing indicates that the inverter is working normally. Close the circuit breakers of the PV array and the Mains. Finally, turn on AC loads one by one as the AC output is normal to avoid a protection action caused by a large momentary shock due to simultaneous turning on the loads simultaneously. Now, the machine goes into a normal operation according to the set mode.

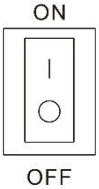

Note: If power is supplied to different AC loads, it is recommended to first turn on the load with a large surge current. After the load is stable, turn on the load with a small surge current.

Note: If the all-in-one solar charge inverter does not work properly or the **LCD** or indicator is abnormal, refer to Chapter 6 to handle the exceptions.

3. Operating modes

3.1 Charging mode

The charge mode corresponds to the parameter setting item 06, allowing users' manual setting.

1) **Hybrid charging (SNU) :** PV and mains hybrid charging. PV MPPT charging is a priority, and when PV energy is insufficient, the mains supply supplements. When the PV energy is sufficient again, the mains stops charging. This is the fastest charging mode, suitable for the areas where power grid is unstable, providing sufficient backup power supply at any time.

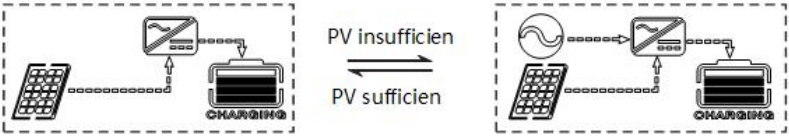

2) **Only Solar (OSO):** Only PV charging, without Mains charging. This is the most energy-efficient way in which battery is charged only by solar panels, and is usually used in areas with good lighting conditions.

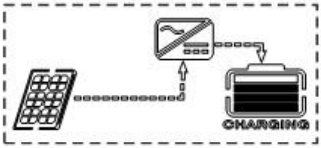

3.2 Output mode

The AC output mode corresponds to parameter setting items of 01, allowing users' manual setting.

1) **PV priority mode:** Using photovoltaic, battery energy to power the load, with the photovoltaic taking priority over the load.

When the PV energy is greater than the load, the excess energy charges the battery.

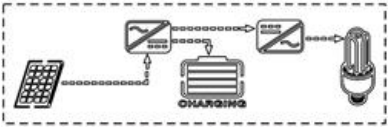

When the PV energy is less than the load, the lack of energy is replenished by the battery.

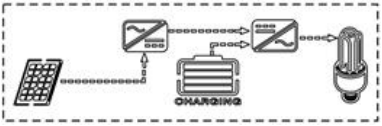

When the PV is ineffective, switch to utility power supply and charging; when the PV is restored, switch to PV and battery with load.

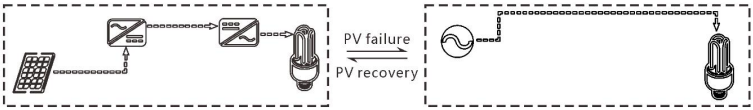

No BMS communication: when the battery voltage is lower than the 04 setting item, switch to utility power supply and charging; when the battery voltage is higher than the 05 setting item, switch to PV and battery with load.

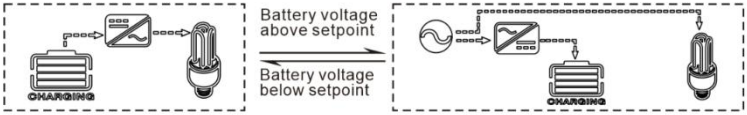

There is BMS communication: when the battery SOC is lower than 61 setting item, switch to utility power supply and charging; when the battery SOC is higher than 62 setting item, switch to PV, battery with load.

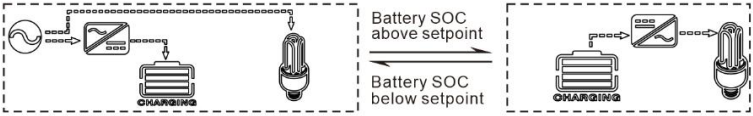

This model maximizes the use of solar energy while maintaining battery power and is suitable for areas with relatively stable power grids.

2) **Mains priority mode:** Switch to inverter only when the mains fails (when there was mains power, switch to mains power for charging and power supply).Then, the unit is equivalent to a backup UPS, suitable for areas with unstable grid.

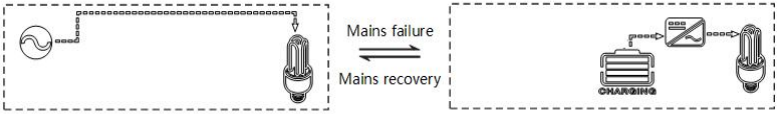

Switching does not affect PV charging.

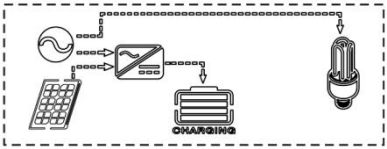

3) **Inverter priority mode:** Use of photovoltaic, battery energy to power the load, with the photovoltaic taking priority over the load.

When the PV energy is greater than the load, the excess energy charges the battery.

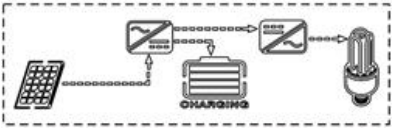

When the PV energy is less than the load, the lack of energy is replenished by the battery.

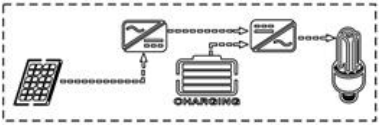

When the PV is ineffective, switch to utility power supply and charging; when the PV is restored, switch to PV and battery with load.

No BMS communication: when the battery voltage is lower than the 04 setting item, switch to utility power supply and charging; when the battery voltage is higher than the 05 setting item, switch to PV and battery with load.

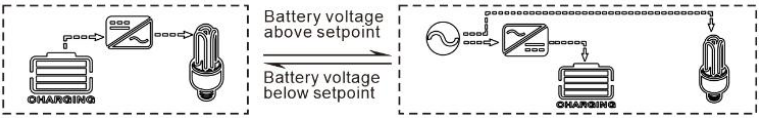

There is BMS communication: when the battery SOC is lower than 61 setting item, switch to utility power supply and charging; when the battery SOC is higher than 62 setting item, switch to PV, battery with load.

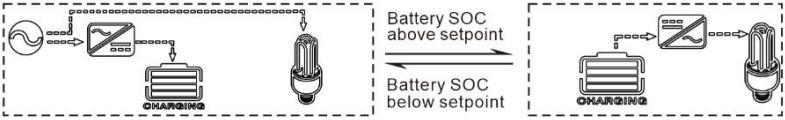

This mode maximizes the use of DC energy and is used in areas where the grid is stable. Switching does not affect PV charging.

4) **Mixed functions mode:** When the battery is not available or the battery is fully charged, the load is provided by PV and commercial power, PV maximum output power output。

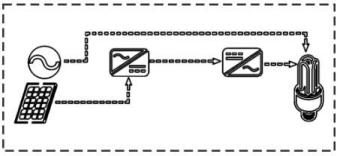

4. LCD screen operating instructions

4.1 Operation and display panel

The operation and display panel is as shown below, including 1 LCD screen, 3 indicators and 4 operation buttons.

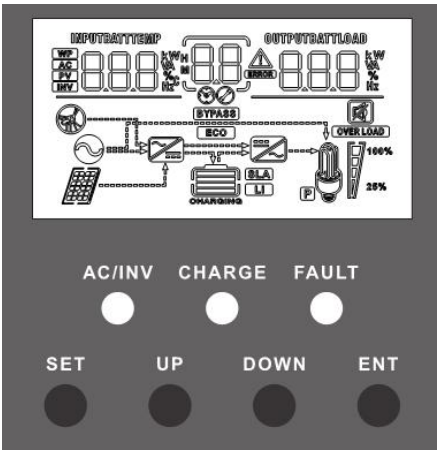

Operation buttons introduction

Function buttons	Description
SET	Enter/Exit Settings menu
UP	Previous choice
DOWN	Next choice
ENT	Confirm/Enter Options under the settings menu,

Indicators introduction

Indicators	Colors	Description
AC/INV	Yellow	Steady on: Mains output
		Flash: Inverter output
CHARGE	Green	Flash: Battery charging
		Steady on: Charging completed
FAULT	Red	Flash : Fault state

LCD screen introduction

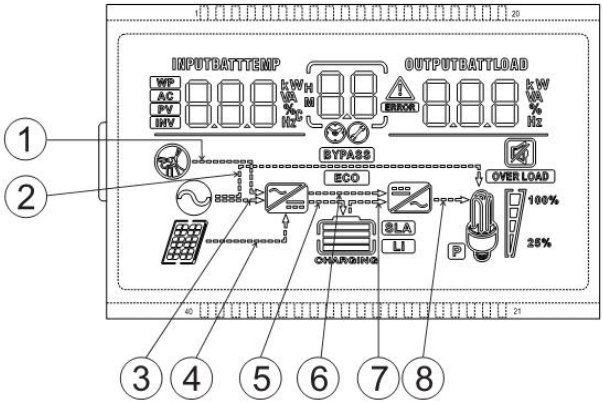

Icons	Functions	Icons	Functions
	Indicates that the AC input terminal has been connected to the grid		Indicates that the inverter circuit is working
	Indicates that the AC input mode in APL mode (wide voltage range)	BYPASS	Indicates that the machine is in the Mains Bypass mode
	Indicates that the PV input terminal has been connected to the solar panel	OVER LOAD	Indicates that the AC output is in an overload state
	Indicates that the machine has been connected to the battery: indicates that the remaining battery is 0%~24%; indicates that the remaining battery is 25%~49%; indicates that the remaining battery is 50%~74%; indicates that the remaining battery is 75%~100%.	100% 25%	Indicates the percentage of AC output loads: indicates that the load percentage is 0%~24%; indicates that the load percentage is 25%~49%, indicates that the load percentage is 50%~74%, indicates that the load percentage is ≥75%.
LI	Indicates that the battery type of the machine is a lithium battery		Indicates that the buzzer is not enabled
SLA	Indicates that the current battery type of the machine is a lead-acid battery		Indicates that the machine has an alarm

CHARGING	Indicates that the battery is in charging state	ERROR	Indicates that the machine is in a fault condition
	Indicates that the AC/PV charging circuit is working		Indicates that the machine is in setup mode
	Indicates that the AC output terminal has an AC voltage output		The parameters displayed in the middle of the screen: 1. In the non-setup mode, the alarm or fault code is displayed. 2. In the setup mode, the currently set parameter item code is displayed.
Parameters display on the left side of the screen: input parameters			
AC	Indicates AC input		
PV	Indicates PV input		
INV	Indicates inverter circuit		
WP	This icon is not displayed		
INPUTBATTEMP WP AC PV INV	Display battery voltage, battery charge total current, mains charge power, AC input voltage, AC input frequency, PV input voltage, internal heat sink temperature, software version		
Parameters display on the right side of the screen: Output parameters			
OUTPUTBATTLOAD	Indicates output voltage, output current, output active power, output apparent power, battery discharge current, software version; in setup mode, displays the set parameters under the currently set parameter item code		
Arrow display			
①	The arrow is not displayed	⑤	Indicates the charging circuit charging the battery terminal
②	Indicates the grid supplying power to the load	⑥	Indicates the PV supply to the inverter circuit
③	Indicates grid supplying power to the charging circuit	⑦	Indicates the battery terminal supplying power to the inverter circuit
④	Indicates PV module supplying power to the charging circuit	⑧	Indicates the inverter circuit supplying power to the load

Real-time data viewing method

On the LCD main screen, press the "UP" and "DOWN" buttons to scroll through the real-time data of the machine.

Page	Parameters on the left side of the screen	Parameters in the middle of the screen	Parameters on the right side of the screen
1	INPUT BATT V (Battery input voltage)	Fault code	OUTPUT LOAD V (Output load voltage)
2	INPUT BATT V (Battery input voltage)		BATT LEVEL % (Battery power)
3	PV TEMP ℃ (PV charger heatsink temperature)		PV OUTPUT KW (PV output power)
4	PV INPUT V (PV input voltage)		PV OUTPUT A (PV output current)
5	INPUT BATT A (Input battery current)		OUTPUT BATT A (Battery output current)
6	INPUT BATT KW (Battery input power)		OUTPUT BATT KW (Battery output power)
7	AC INPUT Hz (AC input frequency)		AC OUTPUT LOAD Hz (AC output frequency)
8	AC INPUT V (AC input voltage)		AC OUTPUT LOAD A (AC output load current)
9	INPUT V (For maintain)		OUTPUT LOAD KVA (Load apparent power)
10	INV TEMP ℃ (AC charge or battery discharge heatsink temperature)		INV OUTPUT LOAD KW (Load active power)
11	APP software version		Bootloader software version
12	Model Battery Voltage Rating		Model Output Power Rating
13	Model PV Voltage Rating		Model PV Current Rating

4.2 Setup parameters description

Buttons operation instructions: Press the "SET" button to enter the setup menu and exit the setup menu. After entering the setup menu, the parameter number [00] will flash. At this point, press the "UP" and "DOWN" buttons to select the code of parameter item to be set. Then, press the "ENT" button to enter the parameter editing mode, and the value of the parameter is flashing. Adjust the value of the parameter with the "UP" and "DOWN" buttons. Finally, press the "ENT" button to complete the parameter editing and return to the parameter selection state.

Parameter no.	Parameter name	Settings	Description
00	Exit setting menu	[00] ESC	Exit the setup menu
01	Output source priority	[01] SOL	PV priority mode, switching to the Mains when the PV fails or the battery is lower than the set value of parameter [04].
		[01] UTI	Photovoltaic energy priority with the load, photovoltaic is not enough, the grid power and photovoltaic mixed load, photovoltaic energy is enough with the load, the excess energy to charge the battery, the grid power only starts charging when the battery is too discharged (06 Settings as" OSO(only PV)) " , the grid power will not charge), the battery is only discharged when off the grid
		[01] SBU	Inverter priority mode, switching to the mains only when the battery is under voltage or lower than the set value of parameter [04].
		[01]SUB **default**	Solar energy priority charging, insufficient solar energy, grid energy and solar energy hybrid charging (if 06 Settings as" OSO(only PV) " ,the grid energy will not charge) and grid with load, when solar energy is enough to charge,excess energy not enough to load, excess solar energy and grid will hybrid load, the battery is discharged only when off the grid
02	Output Frequency	[02] 50.0	Bypass self-adaptation; when the mains is connected, it automatically adapts to the mains frequency; when the mains is disconnected, the output frequency can be set through this menu.
		[02] 60.0 **default**	
03	AC Input	[03] APL	Mains input voltage range of 120V machine: 90~140V

Parameter no.	Parameter name	Settings	Description
	Voltage Range	[03] UPS **default**	Mains input voltage range of 120V machine: 90~140V
04	Battery Power to Utility Setpoint	[04] 23V **default**	When the parameter [01] =SOL/SBU, the battery voltage is lower than the set value, and the output is switched from the inverter to the mains. Setting range: 20V~26V. Cannot exceed the value of [14] settings.
05	Utility to Battery Power Setpoint	[05]28V **default**	When the parameter [01] =SOL/SBU, the battery voltage is higher than the set value, and the output is switched from the mains to the inverter. Setting range: 24V~30V. Cannot be lower than the value of [04] / [35] settings.
06	Charge mode	[06] SNU **default**	PV and Mains hybrid charging; PV charging is a priority, and when the PV energy is insufficient, the Mains charging supplements. When the PV energy is sufficient, the Mains charging stops. Note: Only when the Mains bypass output is loaded, the PV charging and the mains charging can work at the same time. When the inverter works, only the PV charging can be started.
		[06] OSO	Only PV charging, with the Mains charging not activated.
07	Max. charger current	[07] 80A **default**	Max. charger current (AC charger+PV charger). Setting range: 0~80A ; This setting should be greater than 28 items. Item 07 is the maximum charging current for battery charging with "PV and GRID" or "Generator + Utility"
08	Battery Type	[08] USER	User-defined; all battery parameters can be set.
		[08] SLd	Sealed lead-acid battery; constant-voltage charge voltage: 28.8V, floating charge voltage: 27.6V.
		[08] FLd	Vented lead-acid battery; constant-voltage charge voltage: 29.2V, floating charge voltage: 27.6V.
		[08] GEL **default**	Colloidal lead-acid battery; constant-voltage charge voltage: 28.4V, floating charge voltage: 27.6V.

Parameter no.	Parameter name	Settings	Description
		[08] LF07/LF08/LF09	Lithium iron phosphate battery LF07/LF08/LF09, corresponding to 7 strings ,8 strings and 9 strings of lithium iron phosphate battery; for 7 strings, default constant-voltage charge voltage is 24.8V; for 8 strings, default constant-voltage charge voltage is 28.4V; for 9 strings, default constant-voltage charge voltage is 31.8V; allow adjustable.
		N07/N08	Ternary lithium battery; the default constant-voltage charge voltage is 28.4V, which is adjustable.
		NOb	No battery
09	Battery boost charge voltage	[09] 28.8V **default**	Boost charge voltage setting; the setting range is 24V~29.2V, with step of 0.2V; it is valid for user-defined battery and lithium battery.
10	Battery boost charge time	[10] 120 **default**	Boost charge maximum time setting, which means the maximum charging time to reach the set voltage of parameter [09] during constant-voltage charging. The setting range is 5min~900min, with a step of 5 minutes. It is valid for user-defined battery and lithium battery.
11	Battery floating charge voltage	[11] 27.6V **default**	Floating charge voltage, setting range: 24V~229.V, step: 0.2V, valid when battery type is user-defined.
12	Battery over discharge voltage (delay off)	[12] 21V **default**	Over-discharge voltage; when the battery voltage is lower than this judgment point, delay the time set by parameter [13] and turn off inverter output. Setting range is 20V~24V, with a step of 0.2V. It is valid for user-defined battery and lithium battery.
13	Battery over discharge delay time	[13] 5S **default**	Over-discharge delay time; when the battery voltage is lower than the parameter [12], the inverter output will be turned off after the time set by this parameter is delayed. The setting range is 5S~55S, with a step of 5S. It is valid for user-defined battery and lithium battery.
14	Battery under voltage alarm	[14] 22V **default**	Battery undervoltage alarm point; when the battery voltage is lower than the point, an undervoltage alarm is given, and the output is not turned off; the setting range is 20V~26V, with a step of 0.2V. It is

Parameter no.	Parameter name	Settings	Description
			valid for user-defined battery and lithium battery.
15	Battery discharge limit voltage	[15] 20V **default**	Battery discharge limit voltage; when the battery voltage is lower than the point, the output is turned off immediately; the setting range is 20V~26V, with a step of 0.2V. It is valid for user-defined battery and lithium battery.
16	Battery equalization enable	[16] DIS	Equalizing charge is disabled
		[16] ENA **default**	Equalizing charge is enabled, only valid for vented lead-acid battery and sealed lead-acid battery
17	Battery equalization voltage	[17] 29.2V **default**	Equalizing charge voltage; setting range: 24V~29.2V, with a step of 0.2V; valid for vented lead-acid battery and sealed lead-acid battery
18	Battery equalized time	[18] 120 **default**	Equalizing charge time; setting range: 5min~900min, with a step of 5 minutes; valid for vented lead-acid battery and sealed lead-acid battery
19	Battery equalized time out	[19] 120 **default**	Equalizing charge delay; setting range: 5min~900min, with a step of 5 minutes; valid for vented lead-acid battery and sealed lead-acid battery
20	Battery equalization interval	[20] 30 **default**	Equalizing charge derating time, 0~30days, with a step of 1 day; valid for vented lead-acid battery and sealed lead-acid battery
21	Battery equalization immediately	[21] DIS	Stop equalizing charge immediately.
		[21] ENA **default**	Start equalizing charge immediately.
22	Power saving mode	[22] DIS **default**	Power saving mode disabled.
		[22] ENA	After the power saving mode is enabled, if the load is null or less than 50W, the inverter output is turned off after a delay for a certain period of time. When the load is more than 50W, the inverter automatic restart.
23	Restart when over load	[23] DIS	Automatic restart when overload is disabled. If an overload occurs and the output is turned off, the machine will not restart.
		[23] ENA **default**	Automatic restart when overload is enabled. If an overload occurs and the output is turned off, the

Parameter no.	Parameter name	Settings	Description
			machine will restart after a delay of 3 minutes. After it reaches 5 cumulative times, the machine will not restart.
24	Restart when over temperature	[24] DIS	Automatic restart when over temperature is disabled. If an over-temperature shutdown occurs, machine will not restart to turn the output on.
		[24] ENA **default**	Automatic restart when over temperature is enabled. If an over-temperature shutdown occurs, the machine will restart when the temperature drops.
25	Alarm enable	[25] DIS	Alarm is disabled
		[25] ENA **default**	Alarm is enabled
26	Beeps while primary source is interrupted	[26] DIS	Alarm beep is disabled when the status of the main input source changes
		[26] ENA **default**	Alarm beep is enabled when the status of the main input source changes
27	Bypass output when over load	[27] DIS	It is disabled to automatically switch to the Mains when the inverter is overloaded.
		[27] ENA **default**	It is enabled to automatically switch to the Mains when the inverter is overloaded.
28	Max. AC charger current	[28] 40A **default**	Max. AC charger current. Setting range: 0~40A
29	Split Phase	[29] DIS **default**	Supply for industrial frequency transformer (disabled).
		[29] ENA	Supply for industrial frequency transformer (enabled).
32	RS485/CAN communication	[32]DIS **default**	RS485 port for PC or telecommunication control.
		[32]BMS	RS485 port for BMS communication.
		[32]CAN	CAN port for BMS CAN communication function.
33	Battery BMS communication protocol	When the parameter [32] setting item =BMS, you can choose to match the battery manufacturer's BMS protocol to communicate with BMS for the lithium battery protection.	
		PAC=PACE , RDA=Ritar , AOG=ALLGRAND BATTERY , OLT=OLITER , HWD=SUNWODA, DAQ=DAKING, WOW=SNPOWER, PYL=PYLONTECH, UOL=WEILAN	

Parameter no.	Parameter name	Settings	Description
35	Battery undervoltage recovery point	[35] 26V **default**	When the battery voltage is under voltage, the battery voltage needs to recover more than this set value before the inverter starts the output
37	Battery fully charged recovery point	[37] 26V **default**	After the battery is fully charged, it needs to be lower than this set voltage before it can be recharged
38	AC output voltage setting (only can be set in the standby mode)	[38] 120Vac **default**	120Vac **default**. Allow to set to 100Vac/105Vac/110Vac/120/127Vac. The rated output power will be reduced= (Power Rate)*(Vset/120).
57	Stop charging current	[57] 2A **default**	Charging stops when the default charging current is less than this setting.
58	Discharge alarm SOC setting	[58] 15% **default**	SOC alarm when capacity is less than this set value (valid when BMS communication is normal)
59	Cut-off discharge SOC Settings	[59] 5% **default**	Stops discharging when the capacity is less than this setting (valid when BMS communication is normal).
60	Cut-off charge SOC Settings	[60] 100% **default**	Stops charging when capacity is greater than or equal to this setting (valid when BMS communication is normal).
61	Switch to mains SOC Settings	[61] 10% **default**	Switch to mains when capacity is less than this setting (valid when BMS communication is normal).
62	Switch to inverter output SOC Settings	[62] 100% **default**	Switches to inverter output mode when capacity is greater than or equal to this setting (valid when BMS communication is normal).
63	N-PE connection auto switching function	DIS **default**	Automatic switching of N-PE connections is not allowed.
		ENA	Allows automatic switching of N-PE connections.

4.3 Battery type parameters

For Lead-acid Battery :

Battery type / Parameters	Sealed lead acid battery (SLD)	Colloidal lead acid battery (GEL)	Vented lead acid battery (FLD)	User-defined (User)
Overvoltage disconnection voltage	30.0V	30.0V	31.0V	18 ~ 30V
Battery fully charged recovery point(setup item 37)	26V (Adjustable)	26V (Adjustable)	26V (Adjustable)	26V (Adjustable)
Equalizing charge voltage	29.2V	-	29.6V	18 ~ 30V
Boost charge voltage	28.8V	28.4V	29.2V	18 ~ 30V (Adjustable)
Floating charge voltage	27.6V	27.6V	27.6V	18 ~ 30V (Adjustable)
Undervoltage alarm voltage(01 fault)	22V	22V	22V	18 ~ 30V (Adjustable)
Undervoltage alarm voltage recovery point(01 fault)	Undervoltage alarm voltage+0.4V			
Low voltage disconnection voltage(04 fault)	21.0V	21.0V	21.0V	18 ~ 30V (Adjustable)
Low voltage disconnection voltage recovery point (04 fault)(setup item 35)	26V (Adjustable)	26V (Adjustable)	26V (Adjustable)	26V (Adjustable)
Discharge limit voltage	20.0V	20.0V	20.0V	18 ~ 30V (Adjustable)
Over-discharge delay time	5s	5s	5s	1 ~ 30s (Adjustable)
Equalizing charge duration	120 minutes	-	120 minutes	0 ~ 600 minutes (Adjustable)
Equalizing charge interval	30 days	-	30 days	0 ~ 250 days (Adjustable)
Boost charge duration	120 minutes	120 minutes	120 minutes	10 ~ 600 minutes (Adjustable)

For Lithium Battery :

Parameters \ Battery type	Ternary lithium battery (N07)	Ternary lithium battery (N08)	Lithium iron phosphate battery (LF07)	Lithium iron phosphate battery (LF08)	Lithium iron phosphate battery (LF09)
Overvoltage disconnection voltage	31.6V	33V	30V	30V	33V
Battery fully charged recovery point(setup item 37)	27.4V (Adjustable)	30.4V (Adjustable)	23.2V (Adjustable)	26.8V (Adjustable)	29.8V (Adjustable)
Equalizing charge voltage	28.8V (Adjustable)	31.6V (Adjustable)	24.6V (Adjustable)	28.4V (Adjustable)	31.6V (Adjustable)
Boost charge voltage	28.8V (Adjustable)	31.6V (Adjustable)	24.6V (Adjustable)	28.4V (Adjustable)	31.6V (Adjustable)
Floating charge voltage	28.8V (Adjustable)	31.6V (Adjustable)	24.6V (Adjustable)	28.4V (Adjustable)	31.6V (Adjustable)
Undervoltage alarm voltage (01 fault)	23.4V (Adjustable)	26.8V (Adjustable)	21.6V (Adjustable)	24.8V (Adjustable)	27.8V (Adjustable)
Undervoltage alarm voltage recovery point(01 fault)	Undervoltage alarm voltage+0.4V				
Low voltage disconnection voltage (04 fault)	21.0V (Adjustable)	24.0V (Adjustable)	21.0V (Adjustable)	24.4V (Adjustable)	27.0V (Adjustable)
Low voltage disconnection voltage recovery point (04 fault)(setup item 35)	26V (Adjustable)	29.6V (Adjustable)	23.8V (Adjustable)	27.2V (Adjustable)	30.6V (Adjustable)
Discharge limit voltage	19.6V	22.4V	20.4V	23.2V	26.2V
Over-discharge delay time	30s (Adjustable)	30s (Adjustable)	30s (Adjustable)	30s (Adjustable)	30s (Adjustable)
Equalizing charge duration	-	-	-	-	-
Equalizing charge interval	-	-	-	-	-
Boost charge duration	120 minutes (Adjustable)	120 minutes (Adjustable)	120 minutes (Adjustable)	120 minutes (Adjustable)	120 minutes (Adjustable)

5. Other functions

5.1 Dry node

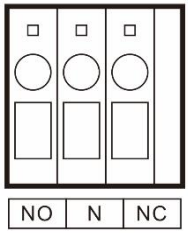

Working principle: This dry node can control the ON/OFF of the diesel generator to charge the battery. ① Normally, the terminals are that the NC-N point is closed and the NO-N point is open; ② When the battery voltage reaches the low voltage disconnection point, the relay coil is energized, and the terminals turn to that the NO-N point is closed while NC-N point is open. At this point, NO-N point can drive resistive loads: 125VAC/1A, 230VAC/1A, 30VDC/1A.

5.2 RS485 communication port

This port is an RS485 communication port which comes with two functions:

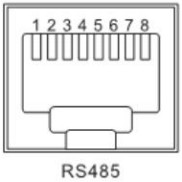

① RS485-2 communication port can be used for RS485 communication with lithium battery BMS (5 pins for RS485A, 6 pins for RS485B);
② It also allows direct connection with the optional RS485 to WiFi/GPRS communication module developed by our company through this port. After the module is selected, you can connect the all-in-one solar charge inverter through the mobile phone WiFi/GPRS APP, on which you can view the operating parameters and status of the device.

As shown in the figure:

Pin 1 is 5V power supply, pin 2 is GND, pin 5 is RS485-A2, pin 6 is RS485-B2, pin 7 is RS485-A1, pin 8 is RS485-B1.(Pin 5 and 6 are A and B wiring sequence for BMS communication; Pin 7 and 8 are A and B wiring sequence for WIFI module communication or host computer communication,B wiring sequence for WIFI module communication or host computer communication.)

5.3 Can communication function

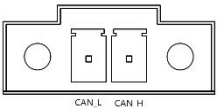

Function of connecting lithium battery communication

As shown in the figure:

Pin 1 is CAN-L, and Pin 2 is CAN-H

5.4 USB communication port

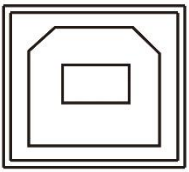

This is a USB communication port, which can be used for USB communication with the optional PC host software. To use this port, you should install the corresponding "USB to serial chip CH340T driver" and APP in the computer.

6. Protection

6.1 Protections provided

No.	Protections	Description
1	PV current/power limiting protection	When charging current or power of the PV array configured exceeds the PV rated, it will charge at the rated.
2	PV night reverse-current protection	At night, the battery is prevented from discharging through the PV module because the battery voltage is greater than the voltage of PV module.
3	Mains input over voltage protection	When the mains voltage exceeds 140V (120V model), the mains charging will be stopped and switched to the inverter mode.
4	Mains input under voltage protection	When the mains voltage is lower than 90V (120V model or APL mode), the mains charging will be stopped and switched to the inverter mode.
5	Battery over voltage protection	When the battery voltage reaches the overvoltage disconnection point, the PV and the mains will be automatically stopped to charge the battery to prevent the battery from being overcharged and damaged.
6	Battery low voltage protection	When the battery voltage reaches the low voltage disconnection point, the battery discharging will be automatically stopped to prevent the battery from being over-discharged and damaged.
7	Load output short circuit protection	When a short-circuit fault occurs at the load output terminal, the AC output is immediately turned off and turned on again after 1 second.
8	Heat sink over temperature protection	When the internal temperature is too high, the all-in-one machine will stop charging and discharging; when the temperature returns to normal, charging and discharging will resume.
9	Overload protection	Output again 3 minutes after an overload protection, and turn the output off after 5 consecutive times of overload protection until the machine is re-powered. For the specific overload level and duration, refer to the technical parameters table in the manual.
10	PV reverse polarity protection	When the PV polarity is reversed, the machine will not be damaged.
11	AC reverse protection	Prevent battery inverter AC current from being reversely input to Bypass.
12	Bypass over current protection	Built-in AC input overcurrent protection circuit breaker.
13	Battery input over current protection	When the discharge output current of the battery is greater than the maximum value and lasts for 1 minute, the AC input would switched to load.

14	Battery input protection	When the battery is reversely connected or the inverter is short-circuited, the battery input fuse in the inverter will blow out to prevent the battery from being damaged or causing a fire.
15	Charge short protection	When the external battery port is short-circuited in the PV or AC charging state, the inverter will protect and stop the output current.

6.2 Fault code meaning

Fault code	Fault name	Whether it affects the output or not	Description
【01】	BatVoltLow	Yes	Battery undervoltage alarm
【02】	BatOverCurrSw	Yes	Battery discharge average current overcurrent software protection
【03】	BatOpen	Yes	Battery not-connected alarm
【04】	BatLowEod	Yes	Battery undervoltage stop discharge alarm
【05】	BatOverCurrHw	Yes	Battery overcurrent hardware protection
【06】	BatOverVolt	Yes	Charging overvoltage protection
【07】	BusOverVoltHw	Yes	Bus overvoltage hardware protection
【08】	BusOverVoltSw	Yes	Bus overvoltage software protection
【09】	PvVoltHigh	No	PV overvoltage protection
【10】	PvBuckOCSw	No	Buck overcurrent software protection
【11】	PvBuckOCHw	No	Buck overcurrent hardware protection
【12】	bLineLoss	No	Mains power down
【13】	OverloadBypass	Yes	Bypass overload protection
【14】	OverloadInverter	Yes	Inverter overload protection
【15】	AcOverCurrHw	Yes	Inverter overcurrent hardware protection
【17】	InvShort	Yes	Inverter short circuit protection

【19】	OverTemperMppt	No	Buck heat sink over temperature protection
【20】	OverTemperInv	Yes	Inverter heat sink over temperature protection
【21】	FanFail	Yes	Fan failure
【22】	EEPROM	Yes	Memory failure
【23】	ModelNumErr	Yes	Model setting error
【26】	RlyShort	Yes	Inverted AC Output Backfills to Bypass AC Input
【29】	BusLow	Yes	Internal battery boost circuit failure
【30】	BatCapacityLow1	NO	Alarm given when battery capacity rate is lower than 10% (setting BMS to enable validity)
【31】	BatCapacityLow2	NO	Alarm given when battery capacity rate is lower than 5% (setting BMS to enable validity)
【32】	BatCapacityLowStop	Yes	Inverter stops when battery capacity is low (setting BMS to enable validity)
【34】	CanCommFault	Yes	CAN communication fault in parallel operation
【58】	BMS communication error	NO	Check whether the communication line is connected correctly and whether **[33]** is set to the corresponding lithium battery communication protocol
【59】	BMS alarm	NO	Check the BMS fault type and troubleshoot battery problems
【60】	BMS battery low temperature alarm	NO	BMS alarm battery low temperature
【61】	BMS battery over temperature alarm	NO	BMS alarm battery over temperature
【62】	BMS battery over current alarm	NO	BMS alarm battery over current
【63】	BMS low battery talarm	NO	BMS alarm low battery
【64】	BMS battery over voltage alarm	NO	BMS alarm battery over voltage

6.3 Handling measures for part of faults

Fault code	Faults	Handling measures
Display	No display on the screen	Check if the battery air switch or the PV air switch has been closed; if the switch is in the "ON" state; press any button on the screen to exit the screen sleep mode.
【06】	Battery overvoltage protection	Measure if the battery voltage exceeds rated, and turn off the PV array air switch and Mains air switch.
【01】 【04】	Battery undervoltage protection	Charge the battery until it returns to the low voltage disconnection recovery voltage.
【21】	Fan failure	Check if the fan is not turning or blocked by foreign object.
【19】 【20】	Heat sink over temperature protection	When the temperature of the device is cooled below the recovery temperature, normal charge and discharge control is resumed.
【13】 【14】	Bypass overload protection, inverter overload protection	① Reduce the use of power equipment; ② Restart the unit to resume load output.
【17】	Inverter short circuit protection	① Check the load connection carefully and clear the short-circuit fault points; ② Re-power up to resume load output.
【09】	PV overvoltage	Use a multimeter to check if the PV input voltage exceeds the maximum allowable input voltage rated.
【03】	Battery missed alarm	Check if the battery is not connected or if the battery circuit breaker is not closed.
【26】	Inverted AC Output Backfills to Bypass AC Input	Disconnect the AC input,PV input and battery input. After the screen is off, only connect the battery and start up. If fault 26 is reported, it indicates that the AC input relay switch is short-circuited, and you need to contact the manufacturer to replace it.

7. System maintenance

- **In order to maintain the best long-term performance, it is recommended to conduct following checks twice a year.**

  1. Make sure that the airflow around the unit is not blocked and remove any dirt or debris from the heat sink.
  2. Check that all exposed wires are damaged by exposure to sunlight, friction with other objects around them, dryness, bite by insects or rodents, etc., and the wires shall be repaired or replaced if necessary.
  3. Verify for the consistency of indication and display with the operation of the device. Please pay attention to the display of any faults or errors, and take corrective actions if necessary.
  4. Check all wiring terminals for corrosion, insulation damage, signs of high temperature or burning/discoloration, and tighten the screws.
  5. Check for dirt, nesting insects and corrosion, and clean up as required.
  6. If the arrester has failed, replace in time to prevent lightning damage to the unit or even other equipment of the user.

Warning: Danger of electric shock! When doing the above operations, make sure that all power supplies of the all-in-one machine have been disconnected, and all capacitors have been discharged, and then check or operate accordingly!

- **The company does not assume any liability for damage caused by:**

1) Improper use or use in improper site.
2) Open circuit voltage of the PV module exceeds the maximum allowable voltage rated.
3) Temperature in the operating environment exceeds the limited operating temperature range.
4) Disassemble and repair the all-in-one solar charge inverter without permission.
5) Force majeure: Damage that occurs in transportation or handling of the all-in-one solar charge inverter.

8. Technical parameters

Model	SPH302480A
AC mode	
Rated input voltage	110/120Vac
Input voltage range	(90Vac-140Vac) ±2%
Frequency	50Hz/ 60Hz (Auto detection)
Frequency Range	47±0.3Hz ~ 55±0.3Hz (50Hz); 57±0.3Hz ~ 65±0.3Hz (60Hz);
Overload/short circuit protection	Circuit breaker
Efficiency	>95%
Conversion time (bypass and inverter)	10ms (typical)
AC reverse protection	Available
Max. bypass overload current	40A
Inverter mode	
Output voltage waveform	Pure sine wave
Rated output power (VA)	3000
Rated output power (W)	3000
Power factor	1
Rated output voltage (Vac)	120Vac
Output voltage error	±5%
Output frequency range (Hz)	50Hz ± 0.3Hz 60Hz ± 0.3Hz
Max. Efficiency	>92%
Overload protection	**For S model:** (102% < load <125%) ±10%: report error and turn off the output after 5 minutes;

	(125% < load < 150%) ± 10%: report error and turn off the output after 10 seconds; Load >150% ±10%: report error and turn off the output after 5 seconds;
	For U model: (102% < load <110%) ±10%: report error and turn off the output after 5 minutes; (110% < load < 125%) ± 10%: report error and turn off the output after 10 seconds; Load >125% ±10%: report error and turn off the output after 5 seconds;
Peak power	6000VA
Loaded motor capability	2HP
Rated battery input voltage	24V (Minimum starting voltage 22V)
Battery voltage range	Undervoltage alarm/shutdown voltage/overvoltage alarm /overvoltage recovery... settable on LCD screen)
Power saving mode	Load ≤50W
AC charging	
Battery type	Lead acid or lithium battery
Max. charge current(can be set)	0-40A
Charge current error	± 5Adc
Charge voltage range	20 –33Vdc
Short circuit protection	Circuit breaker and blown fuse
Circuit breaker specifications	40A
Overcharge protection	Alarm and turn off charging after 1 minute
PV charging	
Max. PV open circuit voltage	450Vdc
PV operating voltage range	120-450Vdc
MPPT voltage range	120-400Vdc

Battery voltage range	20 –33Vdc
Max. input power	4000W
PV charging current range (can be set)	0-80A
Charging short circuit protection	Blown fuse
Wiring protection	Reverse polarity protection
Hybrid charging Max charger current specifications (AC charger+PV charger)	
Max charger current(can be set)	0-80A
Certified specifications	
Certification	CE(IEC 62109-1/-2)/FCC/SAA
EMC certification level	EN61000
Operating temperature range	-10°C to 55°C
Storage temperature range	-25°C ~ 60°C
Humidity range	5% to 95% (Conformal coating protection)
Noise	≤60dB
Heat dissipation	Forced air cooling, variable speed of fan
Communication interface	USB/CAN/RS485(WiFi/GPRS)/Dry node control
Size (L*W*D)	378mm*280mm*103mm
Weight (kg)	8